MODEL 17

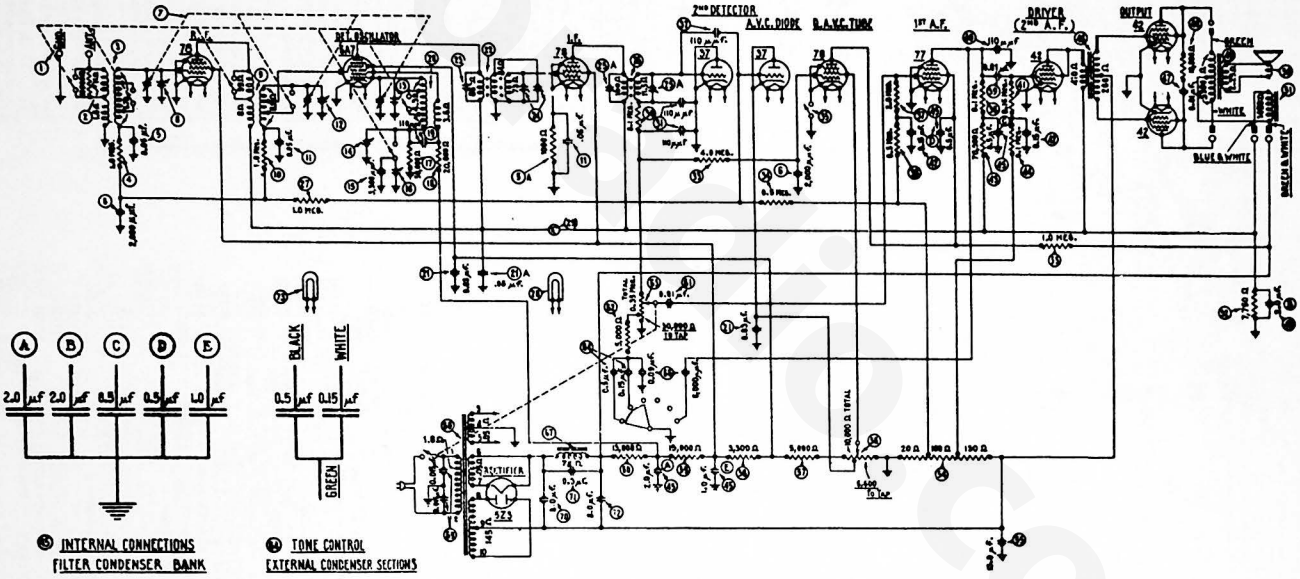
R.F.
DET. REGULATOR
I.F.
2ND DETECTOR
A.V.C. DIODE
B.A.V.C. TUBE
1ST A.F.
DRIVER (2ND A.F.)
OUTPUT
GREEN
WHITE
BLUE & WHITE
BLACK & WHITE
1.0 MEG.
RECTIFIER
A
B
C
D
E
2.0 µf
2.0 µf
0.5 µf
0.5 µf
1.0 µf
BLACK
WHITE
0.5 µf
0.15 µf
GREEN
INTERNAL CONNECTIONS
FILTER CONDENSER BANK
TONE CONTROL
EXTERNAL CONDENSER SECTIONS

MODEL 17

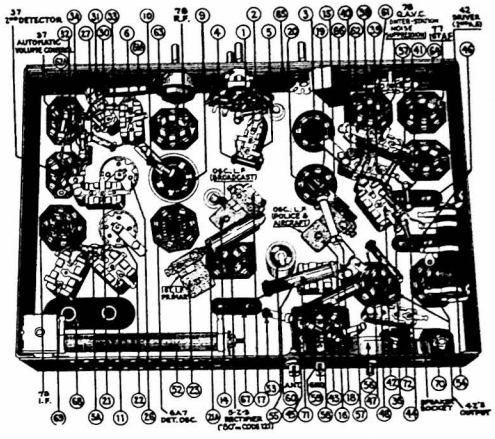

REPLACEMENT PARTS FOR MODEL 17

No. on Figs.	Description	Part Number
1	Wave Band Switch	42-1035
2	Resistor (Brown-Black-Orange)	4412
3	Antenna Transformer	32-1170
4	Resistor (Brown-Black-Green)	4409
5	Condenser	3615-BC
5a	Resistor (Brown-Black-Red)	5837
6	Condenser (Double)	7296-E
7	Tuning Condenser Assembly	31-1041
8	Compensating Condenser (Ant.; Part of 7)	.....
9	1st Detector Transformer	32-1171
10	Resistor (Brown-Black-Green)	4409
11	Condenser (Double)	3615-AP
12	Compensating Condenser (Det.; Part of 7)	.....
13	Compensating Cond. (Osc.; Part of 7)	.....
14	Compensating Condenser (Oscillator)	04000-R
15	Condenser	7301
16	Compensating Cond. (High Freq.)	04000-R
17	Resistor (Green-Brown-Orange)	4518
18	Resistor (Red-Black-Orange)	6649
19	Condenser	4519
20	Oscillator Transformer	32-1172
21	Condenser (Double)	8318-C
21a	Condenser	30-4012
22	1st I. F. Transformer	32-1173
23	Compensating Cond. (1st. I. F. Pri.)	04000-M
24	Compensating Cond. (1st. I. F. Sec.) Compensating Cond. (1st I. F. Tert.)	31-6001
25	Compensating Cond. (2nd, I. F. Pri.)	31-6000
25a	Compensating Cond. (2nd I. F. Sec.)	
26	2nd. I. F. Transformer	32-1174
27	Resistor (Brown-Black-Green)	4409
28	Pilot Lamp (Shadow Tuning Meter); (Part of 29)	.....
29	Shadow Tuning Meter	6497
30	Resistor (White-White-Orange)	4411
31	Condenser (Double)	8035-C
32	Condenser	4519
33	Resistor (Yellow-Black-Green)	6010
34	Resistor (Yellow-White-Yellow)	3769
35	Switch (Toggle); (Interstation Noise Supp. Ckt.)	42-1036
36	Resistor (Yellow-White-Yellow)	4517
37	Resistor (Red-Black-Green)	5872
38	Resistor (White-White-Orange)	4411
39	Condenser	3903-L
40	Condenser	4519
41	Resistor (Brown-Blue-Yellow)	5331
42	Condenser	6287-H
43	Resistor (Violet-Black-Orange)	5385
44	Resistor (White-White-Orange)	4411
45	Filter Condenser Bank	30-4026
46	Input Transformer	32-7057
47	Condenser	3903-F
48	Resistor (Brown-Black-Orange)	3524
49	Output Transformer	32-7052
50	Voice Coil & Cone Assembly	36-3061
51	Speaker Field, Assembled with Pot, (U-2)	36-3088
52	Resistor (Wire-Wound)	33-3020
53	Resistor (Brown-Black-Green)	4409
54	Voltage Divider Resistor (Wire-Wound)	33-3021
55	Condenser (Electrolytic)	30-2003
56	Potentiometer (Interstation Noise Supp. Ckt.)	33-5015
57	Resistor (Green-Black-Red)	5310
58	Resistor (Orange-Orange Red)	7238
59	Resistor (Brown-Green-Orange)	5718
60	Resistor (Brown-Orange-Orange)	6450
61	Condenser	3903-L
62	Resistor (Green-Black-Red)	5310
63	Volume Control & "On-Off" Switch	33-5013
64	Condenser (External to 63)	06713
65	Tone Control	30-4028
66	Condensers (Internal to 63)	.....
67	Filter Choke	32-7056
68	Power Transformer (50-60~)	32-7058
69	Condenser (Double)	3793-R
70	Condenser (Electrolytic)	30-2011
71	Condenser	6287-F
72	Condenser (Electrolytic)	30-2011
73	Pilot Lamp (Station Selector)	6608
	Tube Shield	28-1107
	Four Prong Socket	7545
	Five Prong Socket	7546
	Six Prong Socket	7547
	Seven Prong Socket	27-6005
	Knob (large)	03063
	Knob (small)	03064

NOTE: Model 17-121 uses a Type 80 tube in lieu of 5Z3; Power Transformer (50-60~) 68 No. 32-7080; Resistors (Brown-Black-Orange) No. 33-1024 in both 62 and 63; Electrolytic Condensers 55 No. 6707 and 72 No. 7464; Speaker "K-17"; Speaker Socket No. 7084; Speaker Cable L-1632